MAX Series

EPT20-12EZ

Electric Pallet Truck 1.2t

Let's grow together

EP EQUIPMENT CO.,LTD
www.ep-ep.com

MAX Series

EPT20-12EZ

Electric Pallet Truck 1.2t

Distinguishing mark					
1.1	Manufacturer				EP
1.2	Model designation				EPT20-12EZ
1.3	Drive unit				Electric
1.4	Operator type				Walking type
1.5	rated capacity	Q	lb.	kg	1000
1.6	Load center distance	c	in.	mm	600
1.8	Load distance	x	in.	mm	889/945
1.9	Wheelbase	y	in.	mm	1268/1190
Weight					
2.1	Service weight （include battery）		lb.	kg	150
2.2	Axle loading, laden driving side/loading side		lb.	kg	380/770
2.3	Axle loading, unladen driving side/loading side		lb.	kg	135/15
Types,Chassis					
3.1	Tyre type driving wheels/loading wheels				Polyurethane
3.2	Tyre size, driving wheels（diameter×width）		in.	mm	Φ130x60
3.3	Tyre size, loading wheels（diameter×width）		in.	mm	2x Φ80x60（Φ74x88）
3.4	Tyre size, caster wheels（diameter×width）		in.	mm	
3.5	Wheels, number driving，caster/loading (x=drive wheels)		in.	mm	1x /4（1x /2）
3.6	Track width, front,driving side	b_{10}	in.	mm	
3.7	Track width,rear,loading side	b_{11}	in.	mm	410（535）
Dimensions					
4.4	Lift height	h_3	in.	mm	115
4.9	Height drawbar in driving position min./max.	h_{14}	in.	mm	750/1170
4.15	Lowered height	h_{13}	in.	mm	80
4.19	Overall length	l_1	in.	mm	1540
4.20	Length to face of forks	l_2	in.	mm	390
4.21	Overall width	b_1/ b_2	in.	mm	560（685）
4.22	Fork dimensions	s/ e/ l	in.	mm	50/150/1150
4.25	Distance between fork-arms	b_5	in.	mm	560（685）
4.32	Ground clearance, center of wheelbase	m_2	in.	mm	35
4.34.1	Aisle width for pallets 1000 × 1200 crossways	Ast	in.	mm	1739
4.34.2	Aisle width for pallets 800 × 1200 lengthways	Ast	in.	mm	1939
4.35	Turning radius	Wa	in.	mm	1350
Performance data					
5.1	Travel speed, laden/ unladen	km/ h	mph	km/h	4/4.5
5.2	Lifting speed, laden/ unladen		fpm	m/ s	0.02/0.03
5.3	Lowering speed, laden/ unladen		fpm	m/ s	0.04/0.03
5.8	Max. gradeability, laden/unladen		%		
5.10	Service brake type				Electromagnetic
Electric-engine					
6.1	Drive motor rating S2 60 min		hp	kW	0.45
6.2	Lift motor rating at S3 15%		hp	kW	0.8
6.3	The maximum allowed size battery		in.	mm	170*85*215
6.4	Battery voltage/nominal capacity K20		V/ Ah		24/20
6.5	Battery weight		lb.	kg	3x1
Addition data					
8.1	Type of drive control				DC
10.5	Steering type				Mechanical
10.7	Sound pressure level at the driver's ear		dB (A)		74

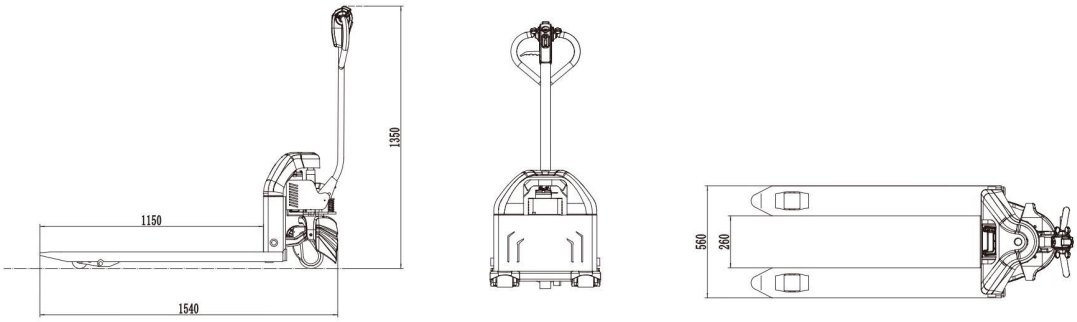

1.The parameters in the table are of the standard model. For more information, please contact us.
2.The parameters are subject to change without notice.

MINI Series

EPT20-20ET

Electric Pallet Truck 2.0t

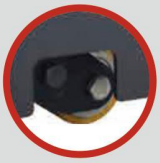

Let's grow together

EP EQUIPMENT CO.,LTD
www.ep-ep.com

MINI Series

EPT20-20ET

Electric Pallet Truck 2.0t

Distinguishing mark				
1.1	Manufacturer			EP
1.2	Model designation			EPT20-20ET
1.3	Drive unit			Electrical
1.4	Operator type			pedestrian
1.5	rated capacity	Q	kg	2000
1.6	Load center distance	c	mm	600
1.8	Load distance	x	mm	860/976
1.9	Wheelbase	y	mm	1234/1350
Weight				
2.1	Service weight （include battery）		kg	215
2.2	Axle loading, laden driving side/loading side		kg	740/1475
2.3	Axle loading, unladen driving side/loading side		kg	180/35
Types,Chassis				
3.1	Tyre type driving wheels/loading wheels			PU/PU
3.2	Tyre size, driving wheels（diameter×width）		mm	Φ260x74
3.3	Tyre size, loading wheels（diameter×width）		mm	2xΦ78x40（2xΦ78x85）
3.4	Tyre size, caster wheels（diameter×width）		mm	Φ74x48
3.5	Wheels, number driving， caster/loading (x=drive wheels)		mm	1x2/4（1x2/2）
3.6	Track width, front,driving side	b_{10}	mm	420
3.7	Track width,rear,loading side	b_{11}	mm	410（535）
Dimensions				
4.4	Lift height	h_3	mm	140
4.9	Height drawbar in driving position min./max.	h_{14}	mm	750/1170
4.15	Lowered height	h_{13}	mm	80
4.19	Overall length	l_1	mm	1685
4.20	Length to face of forks	l_2	mm	535
4.21	Overall width	b_1/ b_2	mm	560（685）
4.22	Fork dimensions	s/ e/ l	mm	50/150/1150
4.25	Distance between fork-arms	b_5	mm	560（685）
4.32	Ground clearance, center of wheelbase	m_2	mm	35
4.34.1	Aisle width for pallets 1000 × 1200 crossways	Ast	mm	1735
4.34.2	Aisle width for pallets 800 × 1200 lengthways	Ast	mm	1935
4.35	Turning radius	Wa	mm	1395
Performance data				
5.1	Travel speed, laden/ unladen	km/ h	km/h	4/4.7
5.2	Lifting speed, laden/ unladen		m/ s	
5.3	Lowering speed, laden/ unladen		m/ s	
5.8	Max. gradeability, laden/unladen			8/16
5.10	Service brake type			Electromagnetic
Electric-engine				
6.1	Drive motor rating S2 60 min		kW	0.75
6.2	Lift motor rating at S3 15%		kW	0.84
6.3	The maximum allowed size battery		mm	265*185*225
6.4	Battery voltage/nominal capacity K20			48/30
6.5	Battery weight		kg	38
Addition data				
8.1	Type of drive control			DC
10.5	Steering type			Mechanical
10.7	Sound pressure level at the driver's ear			74

1.The parameters in the table are of the standard model. For more information, please contact us.
2.The parameters are subject to change without notice.

MINI Series

EPT20-18EHJ

Electric Pallet Truck 1.8t

Let's grow together

EP EQUIPMENT CO.,LTD
www.ep-ep.com

MINI Series

EPT20-18EHJ

Electric Pallet Truck 1.8t

Distinguishing mark				
1.1	Manufacturer			EP
1.2	Model designation			EPT20-18EHJ
1.3	Drive unit			Electrical
1.4	Operator type			Walkie
1.5	rated capacity	Q	kg	1800
1.6	Load center distance	c	mm	600
1.8	Load distance	x	mm	883/946
1.9	Wheelbase	y	mm	1170/1233
Weight				
2.1	Service weight （include battery）		kg	145
2.2	Axle loading, laden driving side/loading side		kg	645/1300
2.3	Axle loading, unladen driving side/loading side		kg	115/30
Types,Chassis				
3.1	Tyre type driving wheels/loading wheels			PU/PU
3.2	Tyre size, driving wheels（diameter×width）		mm	Φ210x70
3.3	Tyre size, loading wheels（diameter×width）		mm	2x Φ80x60（Φ74x88）
3.5	Wheels, number driving，caster/loading (x=drive wheels)		mm	1x /4
3.7	Track width,rear,loading side	b_{11}	mm	410（535）
Dimensions				
4.4	Lift height	h_3	mm	115
4.9	Height drawbar in driving position min./max.	h_{14}	mm	715/1280
4.15	Lowered height	h_{13}	mm	85(75)
4.19	Overall length	l_1	mm	1613
4.2	Length to face of forks	l_2	mm	463
4.21	Overall width	b_1/ b_2	mm	560(685)
4.22	Fork dimensions	s/ e/ l	mm	50/150/1150
4.25	Distance between fork-arms	b_5	mm	560/685
4.32	Ground clearance, center of wheelbase	m_2	mm	35
4.34.1	Aisle width for pallets 1000 × 1200 crossways	Ast	mm	1684
4.34.2	Aisle width for pallets 800 × 1200 lengthways	Ast	mm	1884
4.35	Turning radius	Wa	mm	1430
Performance data				
5.1	Travel speed, laden/ unladen	km/ h	km/h	2.5/3
5.2	Lifting speed, laden/ unladen		m/ s	10mm/time
5.3	Lowering speed, laden/ unladen		m/ s	Controlable
5.8	Max. gradeability, laden/unladen			2/6
5.1	Service brake type			Electromagnetic
Electric-engine				
6.1	Drive motor rating S2 60 min		kW	0.65
6.2	Lift motor rating at S3 15%		kW	Manual Lifting
6.3	The maximum allowed size battery		mm	185/125/190
6.4	Battery voltage/nominal capacity K20			24/30
6.5	Battery weight		kg	9.5*2
Addition data				
8.1	Type of drive control			DC
10.5	Steering type			Mechanical
10.7	Sound pressure level at the driver's ear			74

1.The parameters in the table are of the standard model. For more information, please contact us.
2.The parameters are subject to change without notice.

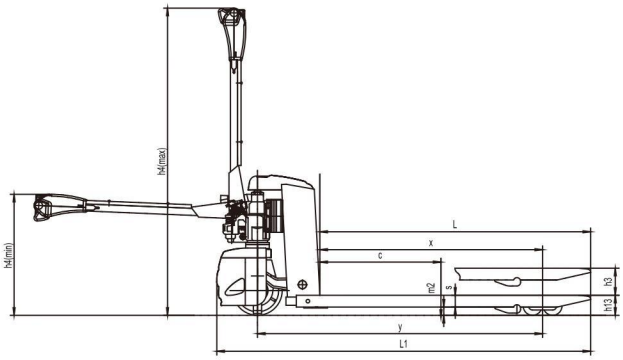

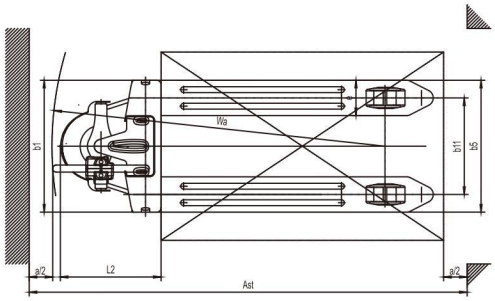

MAX Series

EPT20-WARS

Electric Pallet Truck 2.0t

Let's grow together

EP EQUIPMENT CO.,LTD
www.ep-ep.com

MAX Series

EPT20-WARS

Electric Pallet Truck 2.0t

Distinguishing mark				
1.1	Manufacturer			EP
1.2	Model designation			EPT20-WARS
1.3	Drive unit			Electrical
1.4	Operator type			/
1.5	rated capacity	Q	kg	2000
1.6	Load center distance	c	mm	600
1.8	Load distance	x	mm	946
1.9	Wheelbase	y	mm	1520
Weight				
2.1	Service weight （include battery）		kg	574
2.2	Axle loading, laden driving side/loading side		kg	826/1709
2.3	Axle loading, unladen driving side/loading side		kg	438/126
Types,Chassis				
3.1	Tyre type driving wheels/loading wheels			PU/ PU
3.2	Tyre size, driving wheels（diameter×width）		mm	Φ230x75
3.3	Tyre size, loading wheels（diameter×width）		mm	2x Φ85x70
3.4	Tyre size, caster wheels（diameter×width）		mm	Φ130x55
3.5	Wheels, number driving， caster/loading (x=drive wheels)		mm	1 x +1 / 4
3.6	Track width, front,driving side	b_{10}	mm	396
3.7	Track width,rear,loading side	b_{11}	mm	368/428/513
Dimensions				
4.4	Lift height	h_3	mm	120
4.9	Height drawbar in driving position min./max.	h_{14}	mm	1070/1400
4.15	Lowered height	h_{13}	mm	85
4.19	Overall length	l_1	mm	1937
4.20	Length to face of forks	l_2	mm	787
4.21	Overall width	b_1/ b_2	mm	730
4.22	Fork dimensions	s/ e/ l	mm	55 x 170 x 1150
4.25	Distance between fork-arms	b_5	mm	540/600/685
4.32	Ground clearance, center of wheelbase	m_2	mm	35
4.34.	Aisle width for pallets 1000 × 1200 crossways	Ast	mm	2010
4.34.	Aisle width for pallets 800 × 1200 lengthways	Ast	mm	2210
4.35	Turning radius	Wa	mm	1790
Performance data				
5.1	Travel speed, laden/ unladen	km/ h	km/h	5.5 / 6
5.2	Lifting speed, laden/ unladen		m/ s	0.023/ 0.030
5.3	Lowering speed, laden/ unladen		m/ s	0.032/ 0.029
5.8	Max. gradeability, laden/unladen			8 / 16
5.10	Service brake type			Electromagnetic
Electric-engine				
6.1	Drive motor rating S2 60 min		kW	1.27
6.2	Lift motor rating at S3 15%		kW	0.84
6.3	The maximum allowed size battery		mm	650 x 200 x570
6.4	Battery voltage/nominal capacity K5			24 / 165
6.5	Battery weight		kg	155
Addition data				
8.1	Type of drive control			AC
10.5	Steering type			Mechanical
10.7	Sound pressure level at the driver’s ear			74

1.The parameters in the table are of the standard model. For more information, please contact us.
2.The parameters are subject to change without notice.

MAX Series

JX0

Medium Level Order Picker

Let's grow together

MAX Series

JX0

Medium Level Order Picker

Distinguishing mark				
1.1	Manufacturer			EP
1.2	Model designation			JX0
1.3	Drive unit			Electrics
1.4	Operator type			Standing
1.5	rated capacity on front platform	Q_1	kg	90
	rated capacity on behind platform	Q_2	kg	110
	rated capacity on standing platform	Q_3	kg	130
1.9	Wheelbase	y	mm	1225
Weight				
2.1	Service weight （include battery）		kg	680
2.2	Axle loading, laden driving side/loading side		kg	
2.3	Axle loading, unladen driving side/loading side		kg	
Types,Chassis				
3.1	Tyre type Driving wheels/Loading wheels			PU /rubber
3.2	Tyre size, driving wheels（diameter×width）		mm	Φ250×80
3.3	Tyre size, loading wheels（diameter×width）		mm	Φ200×50
3.5	Wheels, number driving, caster/loading (x=drive wheels)		mm	2x +2
3.6	Track width, front, driving side	b_{10}	mm	700
3.7	Track width, rear, loading side	b_{11}	mm	610
Dimensions				
4.2	Height, mast lowered	h1	mm	1410
4.8	Seat height/standing height	h_7	mm	360
4.14	Stand height, elevated	h_{12}	mm	3060
	Lift height	h_{32}	mm	500
4.19	Overall length	L_1	mm	1505
4.21	Overall width	b_2	mm	800
4.32	Ground clearance, center of wheelbase	m_2	mm	60
4.33	Fork dimensions	L2	mm	600×800
4.34	initial height of front cargo platform	h_2	mm	890
4.35	Control handle height	h_5	mm	960
4.36	Fork dimensions	L4	mm	530×600
4.38	The channel width	Ast	mm	
4.39	Turning radius	Wa	mm	1500
Performance data				
5.1	Travel speed, laden/ unladen		km/ h	4.0/4.5
5.2	Lifting speed, laden/ unladen		m/ s	0.2/0.3
	Lifting speed, laden/ unladen		m/ s	0.028/0.03
5.3	Lowering speed, laden/ unladen		m/ s	0.2/0.2
	Lowering speed, laden/ unladen		m/ s	0.032/0.03
5.8	Max. gradeability, laden/unladen		%	5/8
5.10	Service brake type			Electromagnetic
Electric-engine				
6.1	Drive motor rating S2 60 min		kW	0.2
6.2	Lift motor rating at S3 15%		kW	2.3
6.3	The maximum allowed size battery		mm	260x190x220
6.4	Battery voltage/nominal capacity K5		V/ Ah	24/85
6.5	Battery weight		kg	60
Addition data				
8.1	Type of drive unit			DC
10.5	Steering type			Electronic
10.7	Sound pressure level at the driver's ear		dB (A)	74

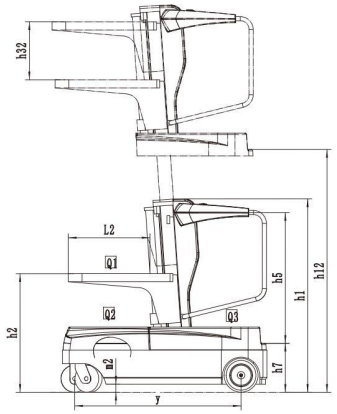

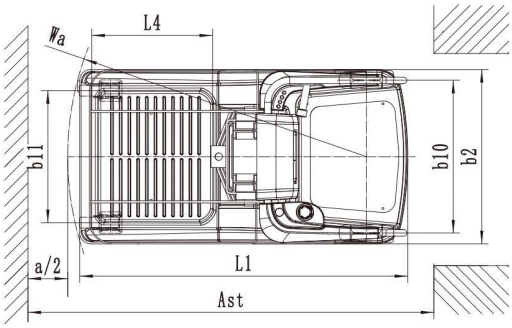

1.The parameters in the table are of the standard model. For more information, please contact us.
2.The parameters are subject to change without notice.

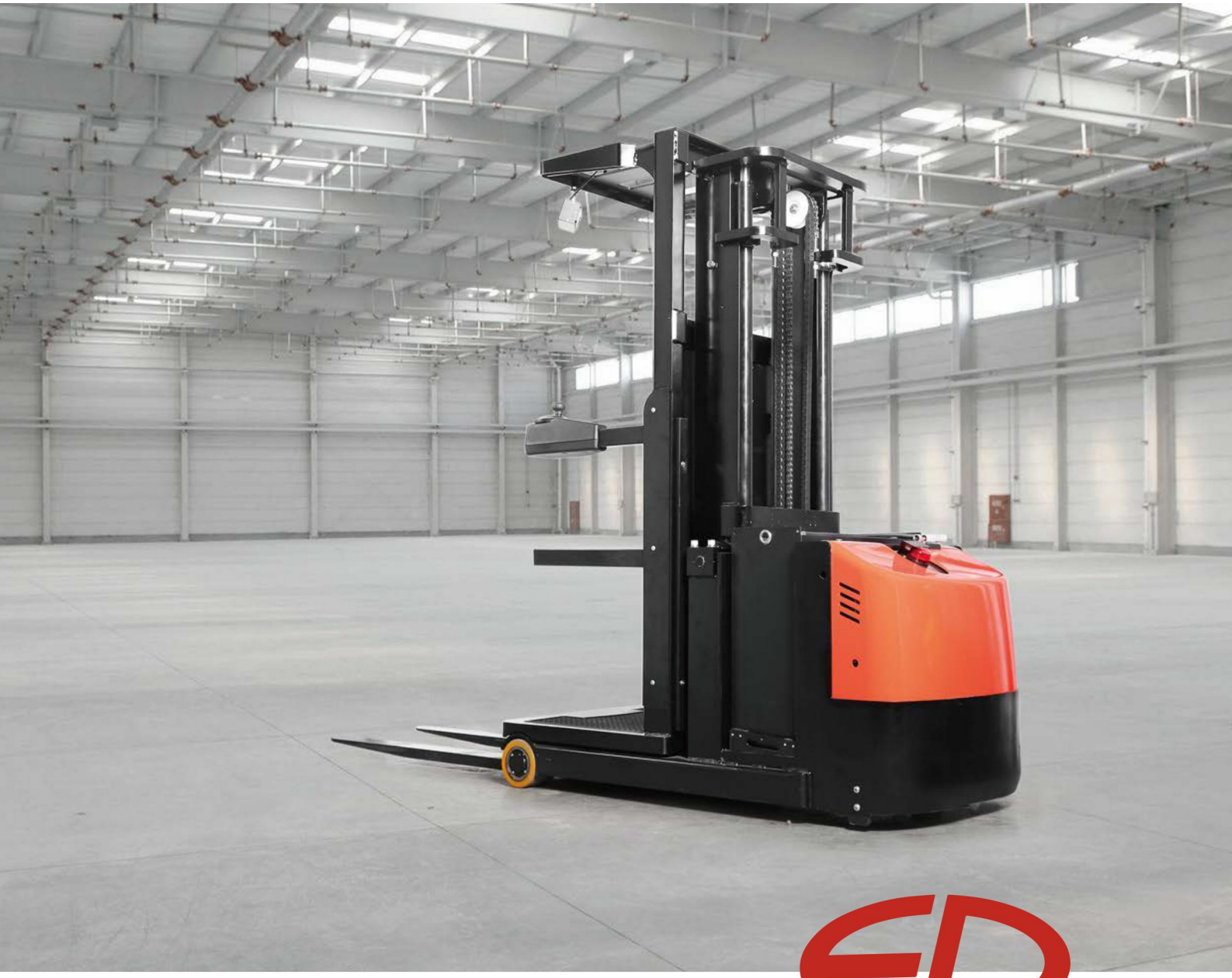

Let's grow together

JX3

Order-picking Truck 1.0t

Meet exactly the same operators' preference as high lifting order picker
Medium level order picker for various applications

EP EQUIPMENT CO.,LTD
www.ep-ep.com

FEATURE

Performance:

- The innovative AC system offers strong power, accurate control,excellent performance;
- High strength vertical gearbox, longer working life;
- Low-noise but durable hydraulic unit, good quality cylinder as well as hose ensure the high reliability of hydraulic system;
- AMP connecter electric wires and cables, greatly reducing electric parts failure rate;
- CJ shape mast channel improves the strength of the whole truck;
- Fully steel covered truck body ensure reliability and safety.

Safety:

- Safe hydraulic system design prevents mast from falling down abruptly when
- dydraulic pipeline cuts off.
  Safety foot switch avoids operators from misoperationturn.
- Automatic braking and reverse current braking when foot switch is off or travel switch is neutrel.
- Emergency disconnector will cut off power source to avoid accident when truck goes out of control.
- Anti-rolling back brake keeps the truck
- from skidding down when truck is out of control or travelling on ramp.
  With highly sensitive control system,
- the truck can accelerate and deaccelerate smoothly without abrupt notice.
  Dual-monitoring power steering.
  Automatically slow down speed when in turn.

Operation:

- With the new design of ergonomical left&right control pot, steering wheel and all buttons can be reached conveniently & comfortably. Optional front control panel is available for different operator's preference.
- With backrest cushion, spacious operation room and vibration absorber pedal, the operator feels more
- comfortable.
  Wide cabin space and competely open view, help operator drive easier and
- longer.
  20mm thickness floor mat and well positioned foot switch help operator
- stand comfortably for long working hours.
- Side-open battery compartment design for easy replacement and maintenance.
  Electric power steering, smooth & comfortable (EPS).

Maintenance:

- AC traction motor, maintenance free;
- Smart LCD screen reflects operation status and battery charging indication.
- Easily remove the back cover by only loosing two bolts; Access to all key components for inspection, maintenance and replacement.
- Vertical motor makes the inspection & service much more convenient.
- Control system allows easy trouble-shooting.
- Low voltage lift cut off design protects the battery.

Order-picking Truck 1.0t
JX3

Distinguishing mark				
1.1	Manufacturer			EP
1.2	Model designation			JX3
1.3	Drive unit			Electrical
1.4	Operator type			Stangding
1.5	rated capacity	Q	kg	1000
1.6	Load center distance	c	mm	600
1.8	Load distance，centre of drive axle to fork	x	mm	105
1.9	Wheelbase	y	mm	1380
Weight				
2.1	Service weight （include battery）		kg	1900
2.2	Axle loading, laden driving side/loading side		kg	610/2290
2.3	Axle loading, unladen driving side/loading side		kg	1150/750
Types,Chassis				
3.1	Tyre type, Driving wheels/Loading wheels			PU
3.2	Tyre size, driving wheels（Diameter×Width）		mm	Φ230×75
3.3	Tyre size, loading wheels（Diameter×Width）		mm	Φ165×120
3.5	Wheels, number driving/loading (x=drive wheels)		mm	1/2
3.6	Track width, front,driving side	b_{10}	mm	/
3.7	Track width,rear,loading side	b_{11}		770
Dimensions				
4.2	Height, mast lowered	h_1	mm	2205
4.4	Lift height)	h_3	mm	3160
4.5	Height, mast extended)	h_4	mm	3680
4.7	Height of overhead guard (cabin)	h_6	mm	5365
4.8	Seat height/standing height)	h_7	mm	220
4.14	Stand height, elevated	h_{12}	mm	3380
4.15	Lowered height	h_{13}	mm	70
4.19	Overall length	l_1	mm	2670
4.20	Length to face of forks	l_2	mm	1680
4.21	Overall width	b_1/ b_2	mm	860
4.22	Fork dimensions	s/ e/ l	mm	1200*100*40
4.25	Distance between fork-arms	b_5	mm	540
4.26	Fork lift height	h2	mm	3200
4.32	Ground clearance, center of wheelbase	m_2	mm	50
4.34.1	Aisle width for pallets 1000 × 1200 crossways	Ast	mm	3120
4.34.2	Aisle width for pallets 800 × 1200 lengthways	Ast	mm	3160
4.35	Turning radius	Wa	mm	1600
Performance data				
5.1	Travel speed, laden/ unladen		km/ h	8
5.2	Lifting speed, laden/ unladen		m/ s	0.13/0.16
5.3	Lowering speed, laden/ unladen)		m/ s	0.16/0.18
5.8	Max. gradeability, laden/unladen		%	0
5.10	Service brake type			Electromagnetic
Electric-engine				
6.1	Drive motor rating S2 60 min		kW	4
6.2	Lift motor rating at S3 15%		kW	3
6.3	The maximum allowed size battery		mm	740*275*630
6.4	Battery voltage/nominal capacity K5		V/ Ah	360
6.5	Battery weight		kg	330
Addition data				
8.1	Type of drive unit			AC
10.5	Steering type			Electronic
10.7	Sound pressure level at the driver’s ear		dB (A)	75

1.The parameters in the table are of the standard model. For more information please contact us.
2.The parameters are subject to change without notice.

MAX Series

E-cart

Electric Tractor 200kg

Let's grow together

EP EQUIPMENT CO.,LTD
www.ep-ep.com

MAX Series

E-cart

Electric Tractor 200kg

Distinguishing mark				
1.1	Manufacturer			EP
1.2	Model designation			E-CART
1.3	Drive unit			Electrical
1.4	Operator type			Pedestrian
1.5	rated capacity	Q	kg	200
1.8	Wheelbase	y	mm	500
Weight				
2.1	Service weight （include battery）		kg	50
2.2	Axle loading, laden driving side/loading side		kg	125/125
2.3	Axle loading, unladen driving side/loading side		kg	25/ 25
Types,Chassis				
3.1	Tyre type driving wheels/loading wheels			Pneumatic/Solid rubber
3.2	Tyre size, driving wheels（diameter×width）		mm	Φ152x50
3.3	Tyre size, steering wheels（diameter×width）		mm	Φ80x30
3.5	Wheels, number driving， steering (x=drive wheels)		mm	2 x + 2
3.6	Track width, front,driving side	b_{10}	mm	434
3.7	Track width,rear,Wheels side	b_{11}	mm	338
Dimensions				
4.1	Lift height	h_3	mm	230
4.3	Lowered height	h_{13}	mm	180
4.4	Overall length	l_1	mm	1164
4.6	Overall width	b_1/ b_2	mm	500
4.9	Ground clearance, center of wheelbase	m_2	mm	20
Performance data				
5.1	Travel speed, laden/ unladen	km/ h	km/h	5.0 / 5.5
5.2	Lifting speed, laden		m/ s	0.0125
5.3	Lowering speed, laden		m/ s	0.0125
5.5	Service brake type			Electromagnetic
Electric-engine				
6.1	Drive motor rating S2 60 min		W	300
6.2	Lift motor rating at S3 15%		W	120
6.4	Battery voltage/nominal capacity K5			24 / 30
Addition data				
8.1	Type of drive control			AC
10.5	Steering type			Mechanical

1.The parameters in the table are of the standard model. For more information, please contact us.
2.The parameters are subject to change without notice.

Let's grow together

QDD30T/30TS

Electric Tractor 3.0t

Super Towing Capacity, Highly-efficient Performance;
Sit-down Operation, Comfortable & Safe.

EP EQUIPMENT CO.,LTD
www.ep-ep.com

FEATURE

Performance

- AC Traction system, big torque, strong grade ability, powerful traction, can overcome all the uneven working condition.
- AMP connecter electric wires and cables, greatly reducing electric parts failure rate.
- Flexibly connected rear axle, grealy reduces vibration.
- 415mm solid pneumatic tyre, great performance in door and out door.

Safety

- Seat switch avoids wrong operation.
- Automatic braking and reverse current braking when foot switch is off or travel switch is neutrel.
- Emergency disconnector will cut off power source to avoid accident when truck goes out of control.
- Anti-rolling back brake keeps the truck from skidding down when truck is out of control or travelling on ramp.
- Hydraulic brake, reverse current brake and mechanical brake.
- Dual-monitoring power steering(EPS).
- Automatically slow down speed when in turn(EPS).

Operation

- Clear layout and spacious driving room.
- Seat with suspension, more comfort-able.
- Steering wheel could be adjustable with big angles to meet operator's needs.
- Big pedal & long support arm makes it comfortable &safe.
- The layout of steering wheel,brake, foot pedal, and other instruments are the same as the electric forklift, which makes it convenient to operate.
- Button at the rear of tractor allows coast travel.
- Electric power steering, smooth & comfortable (EPS).

Maintenance

- AC traction motor, maintenance free.
- Hour meter and battery indicator will remind the operator of battery charging.
- Easily remove the back cover by only loosing four bolts; Easy access for maintenance.
- Control system allows easy trouble-shooting.
- Low voltage lift cut off design protects the battery.

Electric Tractor 3.0t
QDD30T/30TS

Distinguishing mark				
1.1	Manufacturer			EP
1.2	Model designation			QDD30T/QDD30TS
1.3	Drive unit			Electric
1.4	Operator type			Seated
1.5	Load capacity	Q	t	3
1.7	Rated drawbar pull	F	N	750
1.9	Wheelbase	y	mm	930
Weight				
2.1	Service weight		kg	970
2.3	Axle loading, unladen front/ rear		kg	510/460
Types,Chassis				
3.1	Tyre type			solid rubber
3.2	Tyre size, front		mm	4.00-8
3.3	Tyre size, rear		mm	4.00-8
3.5	Wheels, number front/ rear (x=drive wheels)		mm	1/2x
3.7	Tread, rear	b_{11}	mm	870
Dimensions				
4.7	Height of overhead guard (cabin)	h_6	mm	1300
4.8	Seat height	h_7	mm	910
4.12	Tow coupling height	h_{10}	mm	305/350/395
4.13	Loading platform, height	h_{11}	mm	/
4.16	Loading platform, length	l_3	mm	/
4.17	Rear overhang	l_5	mm	365
4.18	Loading platform, width	b_9	mm	/
4.19	Overall length	l_1	mm	1730
4.21	Overall width	b_1	mm	985
4.32	Ground clearance, center of wheelbase	m_2	mm	150
4.35	Outer turning radius	Wa	mm	1575
Performance data				
5.1	Travel speed, laden/ unladen		km/ h	7/15
5.5	Rated drawbar pull, laden/ unladen S_2 5 min.		N	750
5.6	Maximum drawbar pull, laden/ unladen S_2 5 min.		N	3000
5.8	Maximum gradeability, laden/ unladen S_2 5 min.		%	5/20
5.10.1	Service brake			Mechanical+Hydraulic
5.10.2	parking brake			Mechanical+Hydraulic
Electric-engine				
6.1	Drive motor rating S_2 60 min.		kW	4
6.3	Battery dimensions l/ w/ h		mm	/
6.4	Battery voltage/ rated capacity (5h)			48/240
6.5	Battery weight		kg	240
Addition data				
8.4	Sound level at operator's ear		dB (A)	70
8.5	Tow coupling		dB (A)	Bolt Type

1.The parameters in the table are of the standard model. For more information please contact us.
2.The parameters are subject to change without notice.

MAX Series

CQD12RF

Electric Sit-down Reach Truck 1.2t

Let's grow together

EP EQUIPMENT CO.,LTD
www.ep-ep.com

MAX Series

CQD12RF

Electric Sit-down Reach Truck 1.2

Distinguishing mark				
1.1	Manufacturer			EP
1.2	Model designation			CQD12R
1.3	Drive unit			Battery
1.4	Operator type			standing
1.5	rated capacity	Q	t	1.2
1.6	Load center distance	c	mm	500
1.9	Wheelbase	y	mm	1310
Weight				
2.1	Service weight （include battery）		kg	1745
2.2	Axle loading, fork advanced, unladen driving side/loading side		kg	1170/870
2.3	Axle loading, fork retracted, unladen driving side/loading side		kg	1430/600
2.4	Axle loading, fork advanced, laden driving side/loading side		kg	500/2760
2.5	Axle loading, fork retracted, laden driving side/loading side		kg	1090/2090
Types Chassis				
3.1	Tyre type driving wheels/loading wheels			polyurethane/polyurethane
3.2	Tyre size, driving wheels（diameter×width）		mm	Φ230× 75
3.3	Tyre size, loading wheels（diameter×width）		mm	Φ210× 85
3.4	Tyre size, caster wheels（diameter×width）			Φ130× 55
3.5	Wheels, number driving，caster/loading (x=drive wheels)		mm	1×2/2
3.6	Track width, front,driving side	b_{10}	mm	0
3.7	Track width, rear,loading side	b_{11}	mm	900
Dimensions				
4.1	Tilt of mast/fork carriage forward/backward	α/ β	°	2/4
4.2	Height, mast lowered	h_1	mm	2065
4.3	Free lift （load backrest）	h_2	mm	0
4.4	Lift height	h_3	mm	3035
4.5	Height, mast extended	h_4	mm	4000
4.8	Seat height/standing height	h_7	mm	150
4.10	Height of wheel arms	h_8 (mm)	mm	235
4.19	Overall length （minimum）	l_1	mm	2307
4.20	Length to face of forks	l_2	mm	1237
4.21	Overall width	b_1/ b_2	mm	850/988
4.22	Fork dimensions	s/ e/ l	mm	35/100/1070
4.23	Fork carriage class/type A, B		mm	A
4.24	Fork carriage width	b_3	mm	956
4.25	Distance between fork-arms	b_5	mm	200-650
4.26	Distance between wheel arms/loading surfaces	b_4	mm	698
4.28	Reach distance	l_4	mm	500
4.31	Ground clearance, laden, below mast	m_1	mm	75
4.32	The minimum ground clearance of frame	m_2	mm	70
4.34.1	Aisle width for pallets 1000 × 1200 crossways	Ast	mm	2680
4.34.2	Aisle width for pallets 800 × 1200 lengthways	Ast	mm	2735
4.35	turning radius	Wa	mm	1597
4.37	Length across wheel arms （exclusive fork）	l_7	mm	1700
Performance data				
5.1	Travel speed, laden/ unladen	km/ h		5.5/6.0
5.2	Lifting speed, laden/ unladen	m/ s		0.105/0.185
5.3	Lowering speed, laden/ unladen	m/ s		0.16/0.14
5.4	Reaching speed, laden / unladen	m/ s		0.08/0.10
5.8	Max. gradeability, laden/unladen	%		6/10
5.10	Service brake type			Electromagnetic
Electric-engine				
6.1	Drive motor rating S2 60 min	kW		1.5
6.2	Lift motor rating at S3 15%	kW		3
6.3	The maximum allowed size battery		mm	815×208×630
6.4	Battery voltage/nominal capacity K5	V/ Ah		24/210
6.5	Battery weight		kg	190
Addition data				
8.1	Type of drive unit			AC
10.5	Steering type			Electronic
10.7	Sound pressure level at the driver's ear		dB (A)	74

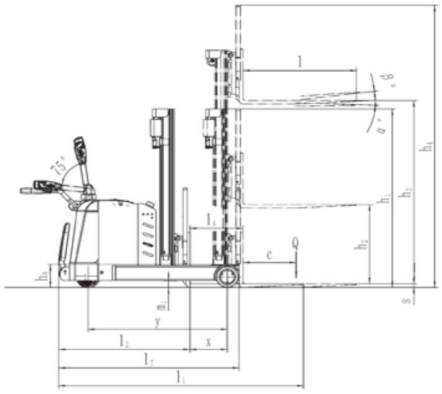

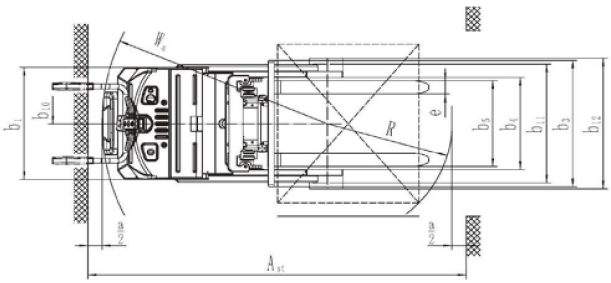

1.The parameters in the table are of the standard model. For more information, please contact us.
2.The parameters are subject to change without notice.